PART NO.	SH	REV.
900-0620	1	02

REV.	SCN NO.	REVISIONS	BY	DATE	APVD.
01		PRELIMINARY CUD RELEASE	JED	10-08-14	

- DESIGNED TO ADAPT TFOCA I INTERFACES TO EXPANDED BEAM TECHNOLOGY.
- CAN BE USED TO DAISY CHAIN CABLE ASSEMBLIES

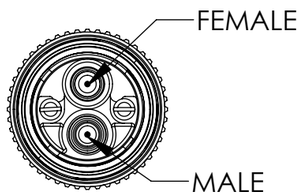

VIEW A-A

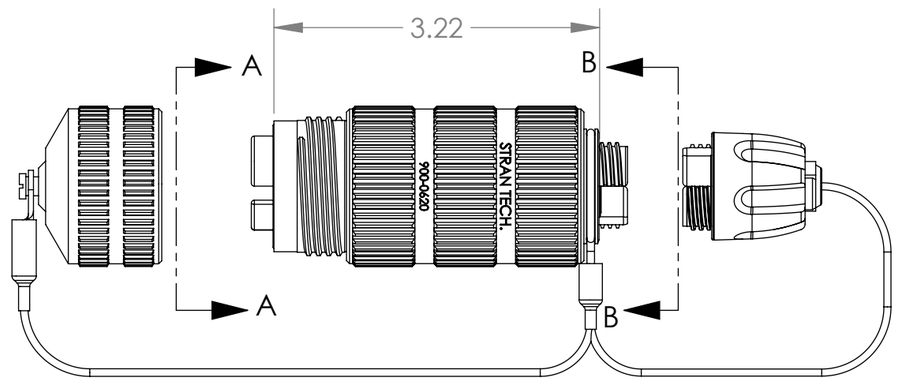

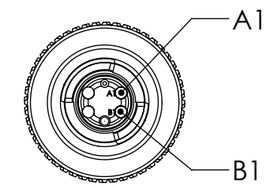

VIEW B-B

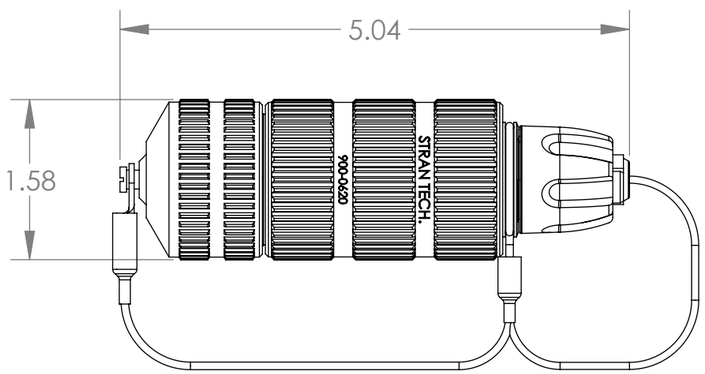

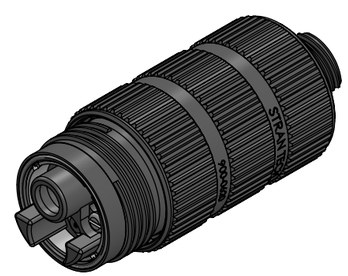

PINOUT TABLE	
FROM	TO
FEMALE	A1
MALE	B1

NOTES:
1. MAX MULTIMODE LINK LOSS: 3.0 dB @ 850nM

NEXT ASS'Y	USED ON
APPLICATION	

TOLERANCES	
.0	± -
.00	± -
.000	± -
.0000	± -
ANGLES	± -

DRAWN BY	DATE
JED	10-08-14
CHECKED BY	DATE
APPROVED BY	DATE

UNLESS OTHERWISE SPECIFIED ALL DIMENSIONS ARE IN INCHES.
ALL DIMENSIONS APPLY AFTER PLATING.

PROPRIETARY INFORMATION

THIS DOCUMENT CONTAINS PROPRIETARY INFORMATION OF STRAN TECHNOLOGIES AND IS DELIVERED ON THE EXPRESSED CONDITIONS THAT IT IS NOT TO BE DISCLOSED OR REPRODUCED IN WHOLE OR PART, OR USED FOR MANUFACTURING FOR ANYONE OTHER THAN STRAN TECHNOLOGIES WITHOUT ITS WRITTEN CONSENT AND THAT NO RIGHT IS GRANTED TO DISCLOSE OR SO USE ANY INFORMATION CONTAINED IN SAID DOCUMENT.

THIRD ANGLE PROJECTION

CORNING

39 GREAT HILL RD, NAUGATUCK, CT 06770 (203) 729-2572

TITLE

ADAPTER, TFOCA I TO EXPANDED BEAM

DWG. SIZE	PART NO.	REV.
B	900-0620	02

CAGE CODE: 1HVU5

SCALE NONE

SHEET 1 OF 1

CUSTOMER USE DRAWING

PART NO. 900-0620 SH 1 REV. 02